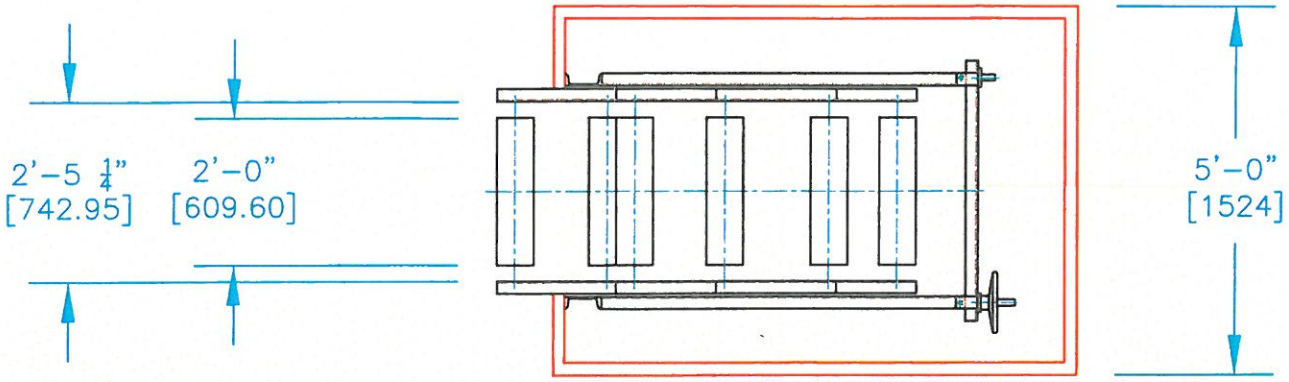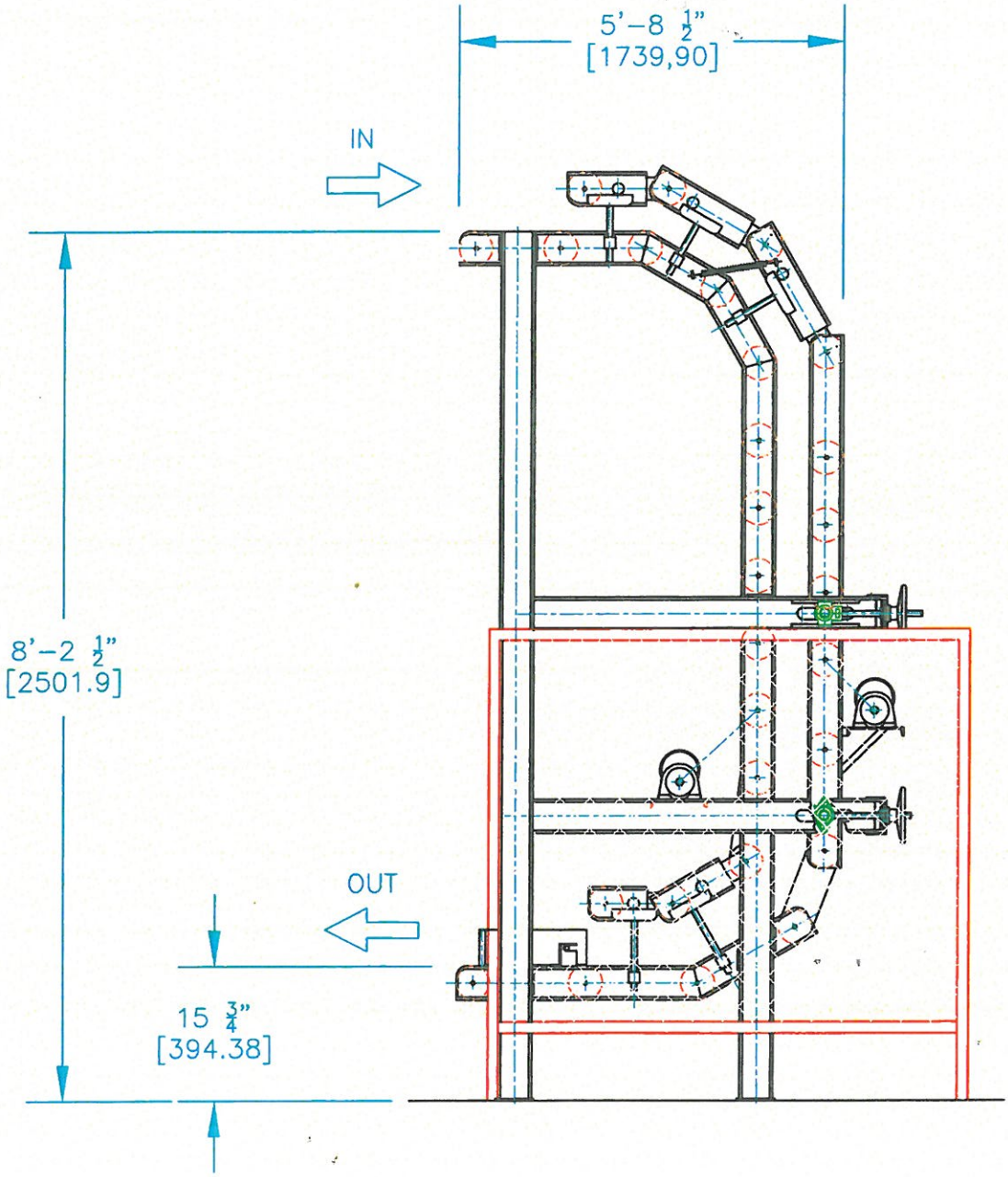CHOICE BAGGING EQUIPMENT, LTD.
Industrial Packaging Equipment Systems Support & Service
4804 North Main St., Taylor, TX 76574 • Phone: 512-352-3694 • Fax: 512-352-3648 • www.findtherightbagger.com